FORD **TRANSIT**

Go Further

Exterior

Contemporary and Professional

[illegible]
have a contemporary, capable and professional look

Flat Body Panel

The [illegible] at body panels are reinforced for strength and provide a substantial advertising space for your business

180º Rear Door

[illegible]
and convenient for loading and unloading bulk or heavy items

4-point Rear Parking Sensors

[illegible]
easier, safer and faster

Innovative Step Bumper

[illegible]
bumper makes it easier to clean the windscreen from edge to edge

[illegible]
into three sections for lower repair costs

Front Windscreen Defogger

[illegible]
windscreen when fogging is an issue

Get in, get comfortable, and get to work

When your vehicle is an integral part of your business, it's important to have the comfort, convenience and specifications that suit your needs. The instrument panel and interior trim have been specifically designed to enhance the efficiency, comfort and potential of your business.

Car-like Comfort

- The interior of the Transit was designed with more than cargo in mind. The cabin is spacious and ergonomical. And although the materials used are durable and commercial grade, they were also chosen for high quality feel and appearance. This combination of thoughtful design, attention to details and materials provide levels of comfort associated more with cars than commercial vehicles.

Facia-mounted Gearshift

- Placing the gearshift on the facia provides a more comfortable and smoother position for shifting. Another advantage of this design is the unobstructed cross-cab access for both the driver and passenger

Shift Indicator Light

- The Shift Indicator Light is easy to see without taking your eyes off the road and helps the driver optimise gear changes, maximising the powertrain efficiency and fuel savings

Practical Storage and Power Points

- Whatever you need to take to work with you, you're sure to find a space for it
- The glovebox has been designed with rails for A4 hanging files. There are two, 2-litre bottle holders and a useful facia-top stowage box that has room for a A4 clipboard. There's even a fold-out work surface with 2 cup holders
- There are also two 12-volt power points; ideal when you need to catch up on paperwork or use a laptop between destinations

High Quality Materials

- Transit interior offers car-like comfort with commercial vehicle durability
- The interior of the Transit is finished with high quality materials on seats, and headliner throughout the cabin

Air Conditioning with Dual Zone Climate Control

- Transit comes with air conditioning designed and tested for the tropical weather of Malaysia
- Transit Window Van comes with front and rear air conditioning. The controls are conveniently located for the driver

Window Van

Grab Handle and Illuminated Step

- The grab handle and illuminated step make passenger access easy and safe

Spacious Cabin for Comfort Ride

- The seats are spacious and have ample leg-room for a comfortable ride

Easy Access

- There is generous space between seats for convenient passenger ingress and egress

Cabin Comfort and Safety Features

- All seats are equipped with 3-point seat belts that meet European safety standards
- Roof-mounted rear air conditioning vents ensure comfort of the passengers
- Transit Window Van comes equipped with hammers for emergency evacuation purpose

Panel Van

Wide Load Area

- Transit's load area is laid out to maximise the available space. The distance between the wheel arches is the widest in its class

Generous Rear Loading

- Transit rear doors open 180º to make loading easier and more practical. The loading bay is cleverly designed to maximise the available space

Over-Cab Storage

- The over-cab storage makes use of space otherwise wasted and allows you to keep items out of sight

Load Compartment Tie-Downs

- Loads can be secured quickly and effectively, preventing damage and injury
- 10 tie-down loops conveniently and strategically located out of the way for easy loading and unloading

Comprehensive all-round protection

Safety and Security

Ford Transit is endowed with end-to-end structural strength. It complements our best in class payload capability and the most comprehensive safety package in the business.

Transit is consistently recognised as one of the leaders for security. From its PATS immobiliser and high security shielded locks, Transit offers a complete portfolio of proven safety and security features.

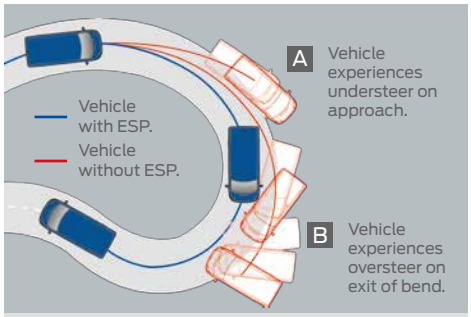

Electronic Stability Programme*

- Electronic Stability Programme (ESP) incorporating ABS, sense when the vehicle is deviating from the driver's chosen line and automatically applies the necessary power and braking adjustments to correct its road position

* Only available in Window Van

Brake Traction Control System*

- Aids traction when starting from rest

Brake Assist (BA)

- A system that detects emergency braking and automatically applies maximum braking effort to potentially reduce the stopping distance

* Only available in Window Van

Hill Launch Assist (HLA)

- Prevents the vehicle from rolling backwards when pulling away on a slope

Dual Front Airbags

- Dual Front Airbags provide enhanced safety for the driver and the front seat passenger

Passive Anti Theft System (PATS)

- When the vehicle is locked, the engine will be disabled
- The engine will only restart when your uniquely coded PATS key is put into the ignition

Remote key function

- Remote central double locking and bonnet release to hinder or deter theft

The perfect chasis for modification

The versatility of the Ford Transit makes it a great choice for modifiers, fleet managers, and end users. It has the capability and payload to handle a wide range of specialty vehicle requirements. Kindly contact a Ford Commercial Vehicle Centre for assistance.

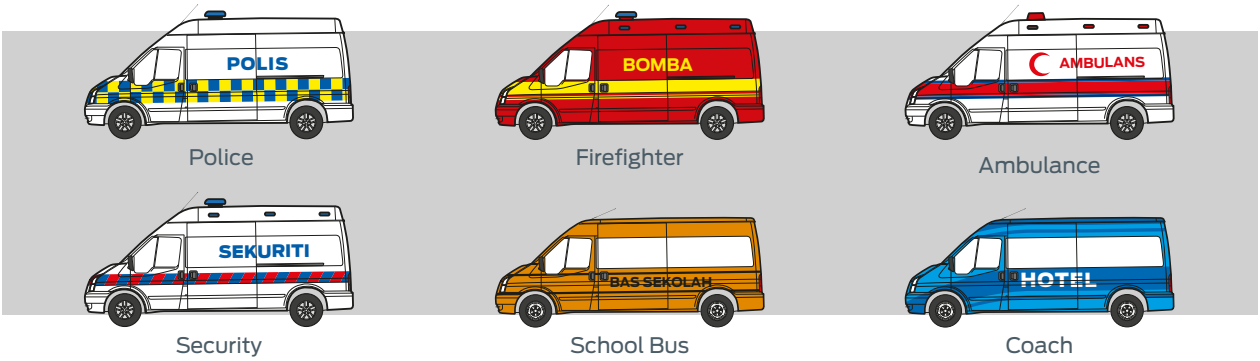

Overall Dimensions

Window Van

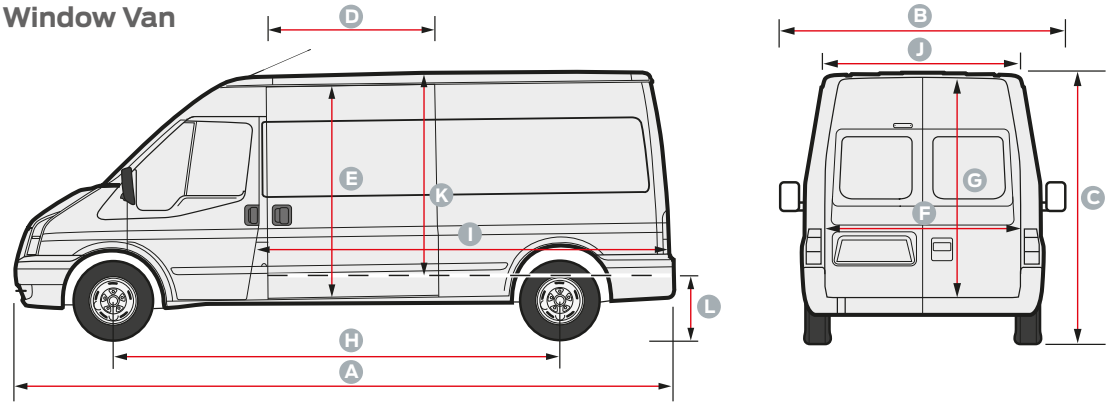

Panel Van

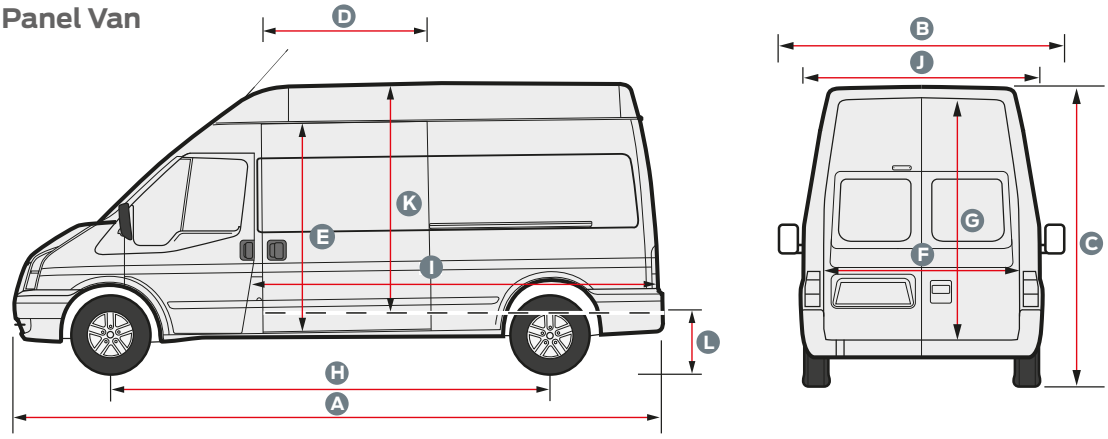

Note: Please refer measurements on next page.

SPECIFICATION			Window Van	Panel Van
ENGINE & TRANSMISSION				
Type			Diesel Inline 4	Diesel Inline 4
Displacement	c.c.		2198	2198
Compression Ratio			15.5 ± 0.5	15.5 ± 0.5
Valves per Cylinder			4	4
Fuel Supply System			Commonrail Direct Injection	Commonrail Direct Injection
Turbocharger			Variable Geometry	Variable Geometry
Maximum Power	kW (PS) @ rpm		114 (155) @ 3500	114 (155) @ 3500
Maximum Torque	Nm @ rpm		385 @ 1600	385 @ 1600
Drivetrain			Chain	Chain
Transmission Type			Six Speed Manual - MT82	Six Speed Manual - MT82
Gear Ratio	1st		5.440	5.440
	2nd		2.840	2.840
	3rd		1.720	1.720
	4th		1.220	1.220
	5th		1.000	1.000
	6th		0.790	0.790
	Reverse		4.935	4.935
Drive-line			Rear Wheel Drive	Rear Wheel Drive
Alternator Output	Amp		150 Amp	150 Amp
Battery Capacity	Ah		60 Ah X 2	60 Ah X 2
CHASSIS AND SUSPENSION				
Braking System	Front		Ventilated Disc	Ventilated Disc
	Rear		Solid Disc in Drum	Solid Disc in Drum
Differential Type			Open Differential	Open Differential
Steering System			Rack and Pinion	Rack and Pinion
Tyres & Wheels			215/75R 16C, Steel	215/75R 16C, Steel
Axle Capacity				
Kerb	Front	kg	1296	1246
Kerb	Rear	kg	1092	853
Plated	Front	kg	1750	1750
Plated	Rear	kg	2250	2250
DIMENSIONS				
Overall Dimensions	Length	mm	5680 (A)	5680 (A)
	Width	mm	1974 (B)	1974 (B)
	Height	mm	2394 (C)	2606 (C)
Loading Height				
Sliding Door RHS Entry Width		mm	-	1275 (D)
Sliding Door RHS Entry Height		mm	-	1500 (E)
Sliding Door LHS Entry Width		mm	650 (D)	1275 (D)
Sliding Door LHS Entry Height		mm	1500 (E)	1500 (E)
Rear Barn Doors Entry Width		mm	1540 (F)	1540 (F)
Rear Barn Doors Entry Height		mm	1566 (G)	1796 (G)
Wheelbase		mm	3750 (H)	3750 (H)
Rear Cargo	Length	mm	3399 (I)	3399 (I)
	Width	mm	1762 (J)	1762 (J)
	Height	mm	1796 (K)	1885 (K)
	Payload	kg	1400	1400
Loading Height		mm	710 (L)	710 (L)
Kerb Weight		kg	2444	2098
Gross Vehicle Weight		kg	3500	3500
Minimum Turning Radius				
Kerb to kerb		mtrs	13.3	13.3
Wall to wall		mtrs	14.3	14.3
Fuel Tank Capacity		litres	80	80
EXTERIOR				
Front Grille			Self Coloured	Self Coloured
Headlamp			Halogen	Halogen
Wiper System			Intermittent	Intermittent
Exterior Rear View Mirror			Powered	Powered
Windscreen			Laminated with Defogger	Laminated with Defogger
Side Window	2nd Row		Tempered with Sliding Window	-
	3rd Row		Tempered Fixed	-
	4th Row		Tempered with Flip Open	-
Rear Windows			Tempered with Defogger	-
Sliding Door			Single LHS	Double RH & LH
Rear Barn Doors Opening		degree	2 Steps - 90° and 180°	2 Steps - 90° and 180°
INTERIOR				
Seating Capacity			13 Including Driver	2 (Driver & One Passenger)
Seat Material			Fabric	Fabric
Rear Seat			With 3-point Seat Belt	-
Audio System			CD/AM/FM Tuner with 2 Speakers	CD/AM/FM Tuner with 2 Speakers
Steering Material			Polyurethane	Polyurethane
Rear Interior Trim			PVC	-
Interior Floor Material			Rubber Insulated	-
SAFETY AND SECURITY				
Passive Anti Theft			S	S
Dual Front Airbags			S	S
Engine Immobilizer			S	S
Anti Lock Braking			S	S
Electronic Brake Force			S	S
Emergency Braking			S	S
Electronic Stability Program			S	-

Remark: S = Standard Equipment, - = Not Available

Window Van

Panel Van

- Colours shown on printed leaflet provide a representation of the colour and may vary on actual vehicle.
- Terms and conditions apply.
- Sime Darby Auto Connexion Sdn Bhd reserves the right to make changes in terms of accessories level and prices at any time without prior notice.

* Only available in Window Van.

Distributed by:

A Sime Darby Motors Company

Sime Darby Auto Connexion Sdn Bhd (68602-V)

ford.net.my

1 800 38 3181

Authorised Ford CV Centre

2014/04

Download the DISCOVER FORD mobile app

http://bit.ly/DiscoverFord

ford.net.my

1 800 38 3181

Go Further